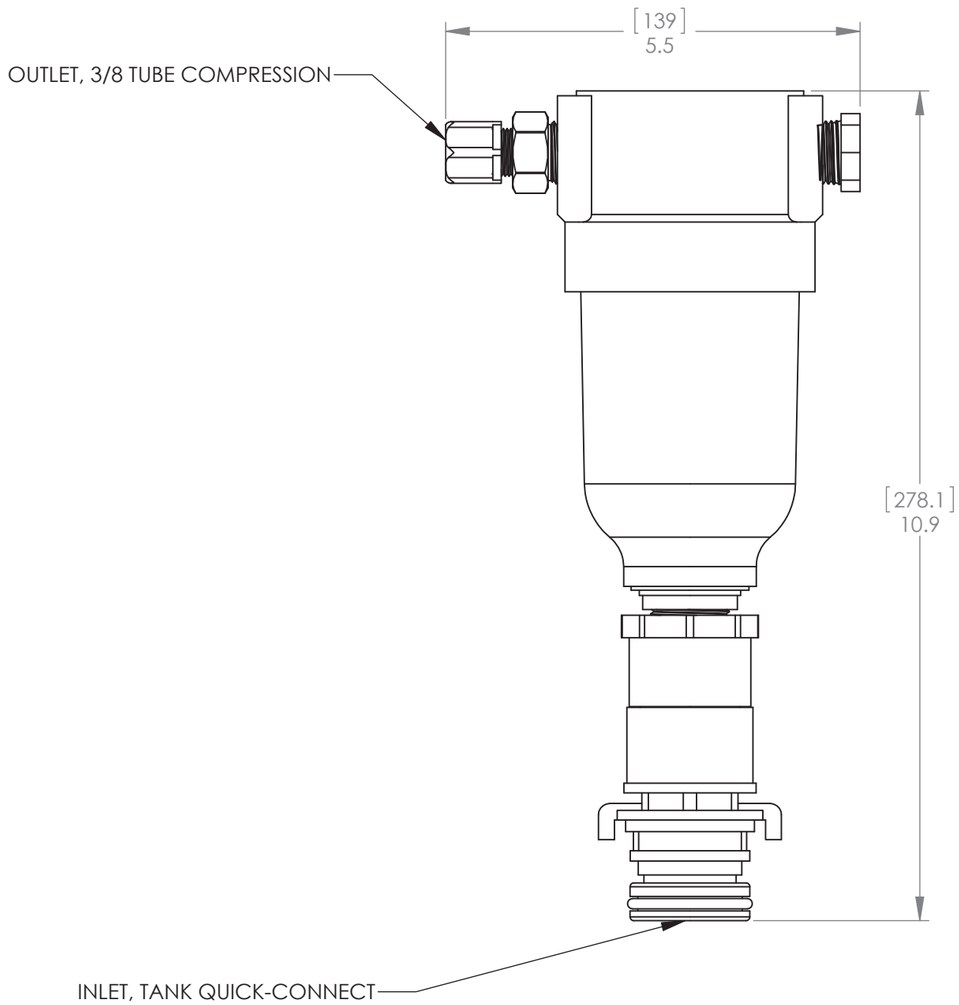

VENT VALVE SPECIFICATIONS

MODEL NO.....9-1144-01

MATERIALS.....PVC INLET FITTINGS
POLYSULFONE BODY
POLYBUTYLENE TEREPHTHALATE CAP
STAINLESS STEEL FLOAT AND VALVE SEAT
VITON O-RINGS
KYNAR TUBE FITTING

WORKING PRESSURE.....50 psi @ 100ºF

FLOW RATE.....258 scfh @ 15 psig
390 scfh @ 30 psig
570 scfh @ 50 psig

ZONE	REV.	DESCRIPTION	ECN	DATE
	A	INITIAL RELEASE	5199	12/12/2013

REVISIONS

ALL DIMENSIONS IN INCHES

TOLERANCES:
.x ± .1
.xx ± .02
.xxx ± .010
ANGLES ± 1°

MATERIAL: AS SPECIFIED

FINISH:

APPROVALS:	DATE:
DRAWN: J. DALLEY	12/11/2013
ENGR. APPR: Jeffrey Dalley	12/12/2013
CHECKED:	
Q.A. APPR:	

PROPERTY OF DEL OZONE
THIS DOCUMENT AND THE DATA DISCLOSED HEREIN IS PROPRIETARY. IT IS NOT TO BE REPRODUCED, USED, OR OTHERWISE DISCLOSED IN WHOLE, OR IN PART, TO ANYONE, WITHOUT WRITTEN CONSENT FROM DEL OZONE.

DEL OZONE™ advanced sanitation solutions

INTERPRET DRAWING PER ANSI Y14.5-1994

SCALE: 1:2

DO NOT SCALE DRAWING

SIZE: B

TITLE: SPECIFICATION
VENT VALVE, POLYSULFONE

DWG. NO:	REV.	SHEET:
4-2123-01	A	1 OF 1

B FORMAT REV A

8 7 6 5 4 3 2 1

D C B A