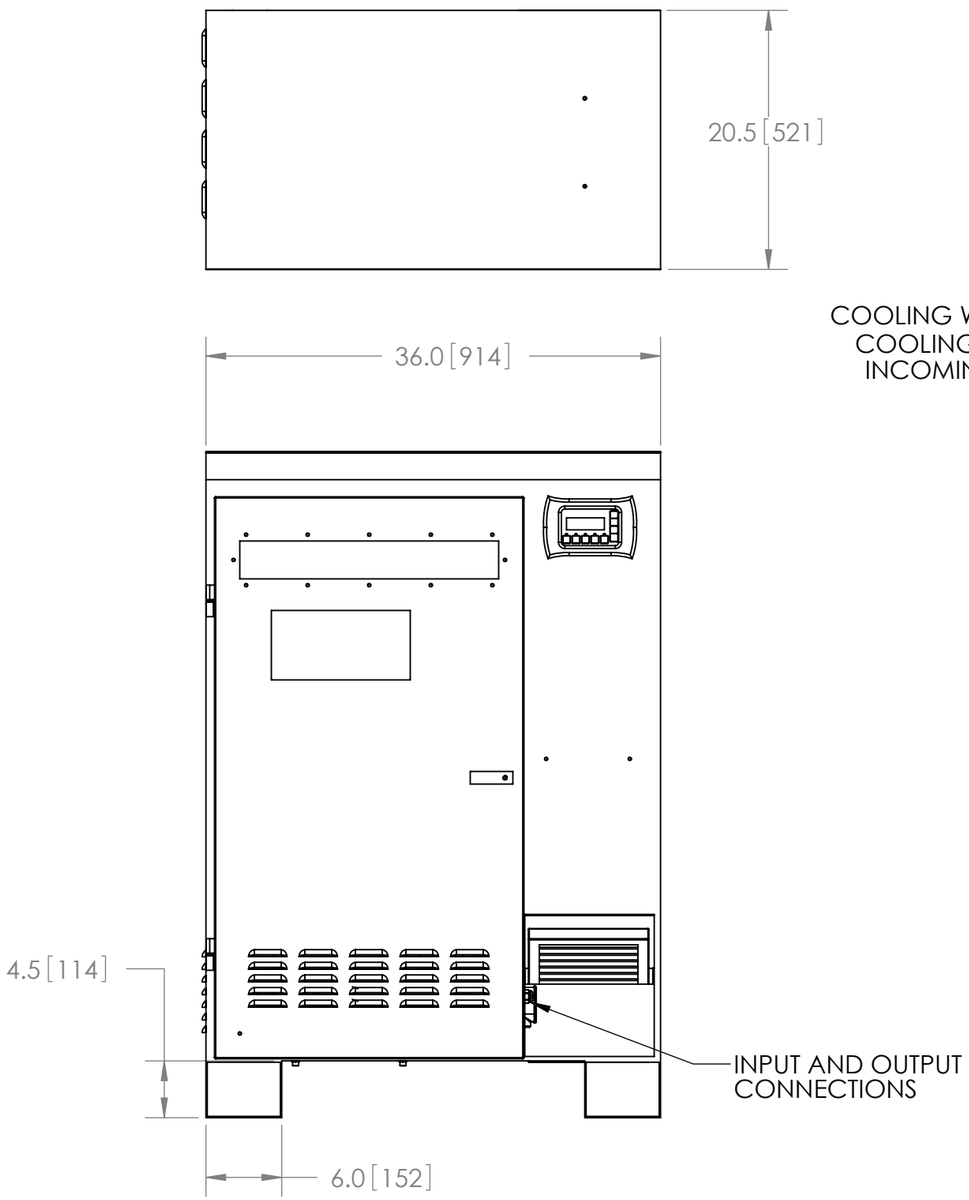

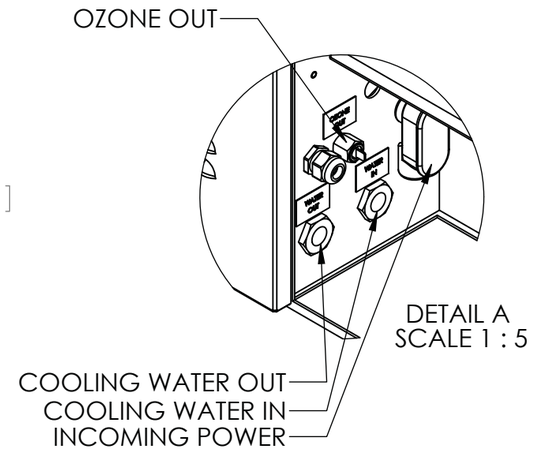

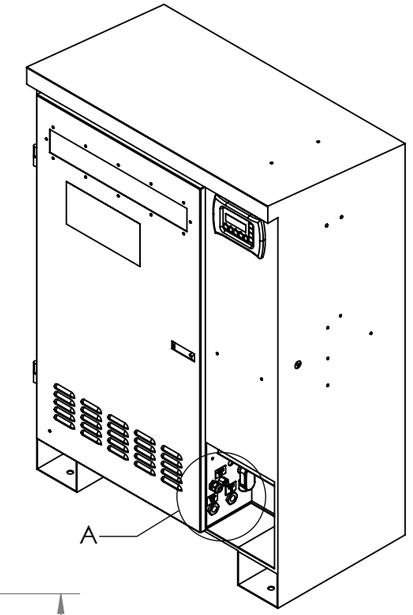

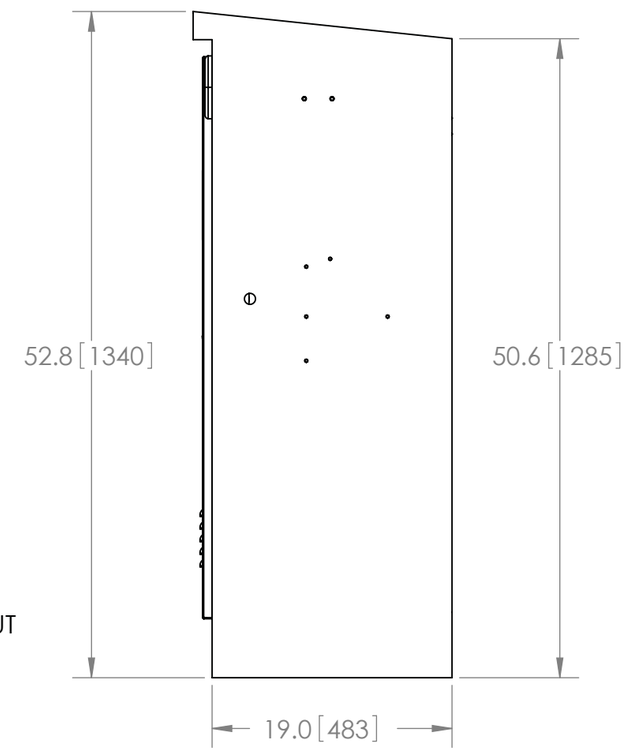

HECD-130 General Specifications

Overall Dimensions:	36" x 52.75" x 20.5"
Mounting Dimensions:	36" x 19"
Net Weight:	Approx 260 lb
Enclosure Material:	Steel, 14 ga
Enclosure Color:	White Powdercoat
Power Requirement:	Approx 4.0 kW
Voltage Requirement:	230 VAC +/- 10%
Frequency:	60 Hz (50 Hz for HECD-130-03)
Current Requirment:	23 A
Fuse:	NA
Cord:	NA
Ozone Production:	130 g/hr +/- 10%
Concentration	5.50%
Feedgas Flowrate:	60 scfh (28 lpm)
Ozone Outlet:	1/4" FPT
Air Inlet:	NA
Cooling Water:	1 gpm (3.8 lpm)
Water Inlet / Outlet	1/2" FPT
Inlet Pressure	15 - 40 psi (100 - 275 kPa)
Operating Temperature*:	40 - 90° F (4 - 32° C)**
Location Requirements:	
Mounting Dimensions:	Bolted to concrete pad in clean area
Ambient Temperature**:	40 - 90° F (4 - 32° C)**
Ventilation	6 Air changes per hour (min)

* Typical pool water may be used for cooling. Generator efficiency and life will be improved at inlet temps of 70° F or less.

** Operating this unit outside the listed temperature range may result in damage not covered under the manufacturer's warranty.

Features

Computerized Controller with operater interface panel	
Protection from	Loss of Vacuum/High Vacuum
	Feed Gas Pressure Failure
	Overheating
	Circulation Fault
	Water Back Flow
Display Parameters	Hours of Operation
	Feed Gas O2 Concentration
Complete Ozone Isolation During Shutdown	
Stainless Steel, Water Cooled Generator Module	
Electrodes	Cold Plasma
	Medium Frequency
	Vertical Tube & Shell
	Glass Tube Dielectric
Variable Output (0-100%)	Adjust Using Integral Touchpad
"True" Vacuum Operation	
Air internally compressed, cooled and filtered	
Auto feed-gas flow control to maintain vacuum	
Oxygen Preparation	
Oxygen Output	60 SCFH @ 14 psig (max) (96 kPa) max
Dewpoint	-100° C
Oxygen Purity	90% +/- 5%

ZONE	REV.	DESCRIPTION	ECN	DATE
	D	UPDATE SPECS WITH METRIC CALLOUTS	5110	07/01/2013
	C	UPDATE DRAWINGS ANS SPEC SHEETS	4936	8/14/2012
ALL	B	REDRAW AS B-SIZE	4394	3/15/2010
ALL	A	"4" P/N ASSIGNED FOR CLEANUP	2810	12/6/2006

REVISIONS

DIMENSIONS IN IN[MM]

TOLERANCES:
.x ± .1
.xx ± .02
.xxx ± .010
ANGLES ± 1°

MATERIAL:

FINISH:

APPROVALS:	DATE:
DRAWN: AJACKSON	03/15/2010
ENGR. APPR: Frank Martin (Digitally signed by Frank Martin DN: cn=Frank Martin, o=DEL Ozone, ou=Engineering, email=fmartin@delozone.com, c=US Date: 2014.09.08 12:04:01 -07'00')	
CHECKED:	
Q.A. APPR:	

PROPERTY OF DEL OZONE

THIS DOCUMENT AND THE DATA DISCLOSED HEREIN IS PROPRIETARY. IT IS NOT TO BE REPRODUCED, USED, OR OTHERWISE DISCLOSED IN WHOLE, OR IN PART, TO ANYONE, WITHOUT WRITTEN CONSENT FROM DEL OZONE.

DEL OZONE advanced sanitation solutions

INTERPRET DRAWING PER ANSI Y14.5-1994

SCALE: 1:12

DO NOT SCALE DRAWING

SIZE: B

TITLE: SPECIFICATION DRAWING HECD-130

DWG. NO: 4-1041-01

REV. D

SHEET: 1 OF 1

8 7 6 5 4 3 2 1

D C B A

B FORMAT REV A